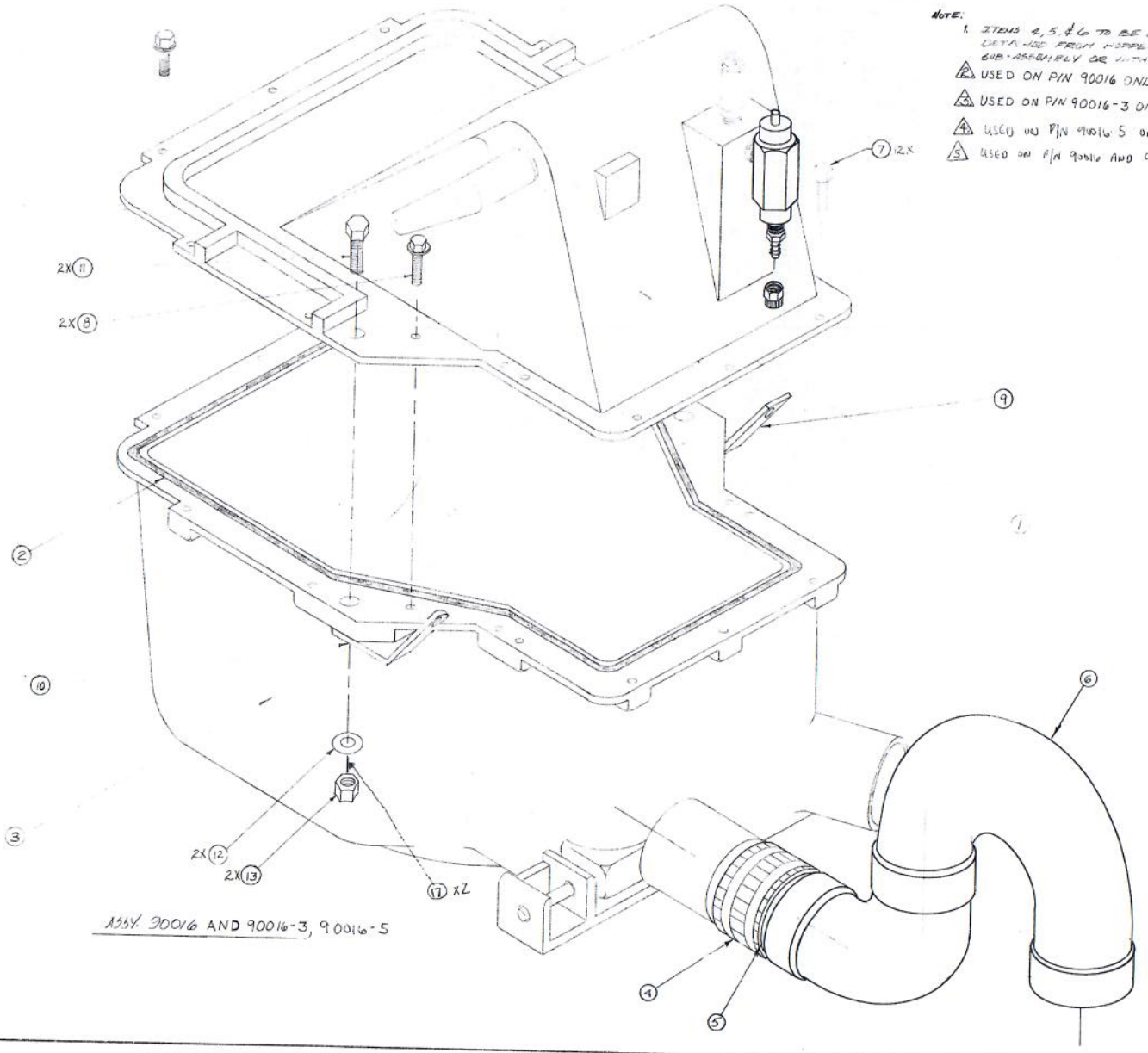

ASSY. 90016 AND 90016-3, 90016-5

NOTE:

1. ITEMS 4, 5, & 6 TO BE SHIPPED UNASSEMBLED, DETACHED FROM HOPPER WHETHER SENT AS A SUB-ASSEMBLY OR WITH-IN A TOILET.

2. USED ON P/N 90016 ONLY.

3. USED ON P/N 90016-3 ONLY.

4. USED ON P/N 90016-5 ONLY.

5. USED ON P/N 90016 AND 90016-5 ONLY.

PRINT DISTRIBUTION	
ENGINEERING	
MARKETING	
CUSTOMER	
MACHINE SHOP	
PLASTIC SHOP	
SHEET METAL SHOP	
PRODUCTION	
SHIPPING	
QUALITY CONTROL	

REV	CHANGE	BY	DATE
J	ECO 7460	Bm	3/14/94
K	ECO 7646	Bm	3/14/94

ITEM	PART NUMBER	DRAWING NO	DESCRIPTION	NO REQD
16	24770-3		KIT, HOPPER REPLACEMENT	1
15	90016-5	3644	HOPPER ASSY KIT MARINE, R.D.	1
14	90012-5	3643		1
13	00527		14-20 ELASTIC LOCKNUT	2
12	00044		1/4 FLAT WASHER CRES	2
11	00832		BOLT, HEX 14-20 X 1 1/2 CRES	2
10	91042	91042	BRACKET HOPPER BOLT (RIGHT)	1
9	91041	91041	BRACKET HOPPER BOLT (LEFT)	1
8	00553		#10-16 X 1 1/4 HEX/WASHER SCREW	2
1			DELETED	
7	00064		SCREW, 10-16 x 3/4" HEX WASHER HD S.S.	12
6	33656		"P" TRAP	1
5	33299		PIPE X 1.50 LG	1
4	33324		1 1/2 NO-HUB CONNECTOR	1
3	90009	3633	HOPPER BOTTOM ASSY.	1
2	27272		"O" RING	1
1	90012	3643	HOPPER TOP ASSY.	1

REV	CHANGE	BY	DATE
H	DCN 90016H	MLN	7/2/94
G	DCN 90016G	MLN	5/6/94
F	DCN 90016F	MLN	5/2/94
A	EN 3498 REV.	DSN	9/27/94
B	EN 3734 REV.	JR	11/31/94
C	DCN 90016C	JR R	11/9/95
D	DCN 90016D	JR R	1/1/96
E	DCN 90016E	SSY	3/96

PRODUCTION
PURCHASING
SALES

N.A.
LF-210

Microphor INC. P.O. BOX 490 WILLITS, CALIF. 95490

TITLE: LF-210 HOPPER ASSY. REAR DISCH. (MARINE) ASSY. 90016

DATE: NOV 17, 1981 | SCALE: FULL | DRAWING NUMBER: 3644

DRAWN BY: [signature] | CHECKED BY: MLN | APPROVED BY: [signature]